Britam
With you every step of the way

TECHNICAL GUIDANCE REPORT

PROPOSED LIFT BACKUP POWER SOLUTION

Britam Tower – Upper Hill, Nairobi

REFERENCE REQUIREMENTS AND DESIGN BASIS FOR TENDERERS

Issued as a technical guidance document accompanying the Request for Proposal (RFP)

November 2026

1. Purpose and Use of this Report

This report provides tenderers with the available technical background, reference design basis, operating requirements and site considerations for the proposed lift backup power solution at Britam Tower. It is intended to guide the preparation of compliant technical and commercial submissions under the accompanying RFP.

The report is a tender reference document and is not a completed detailed design. Tenderers shall undertake their own site verification, engineering calculations and equipment selection, and shall submit a coordinated, fully engineered solution for review and approval before installation.

The SAJ CHS2 Hybrid Energy Storage System (BESS) is used in the source technical assessment as the reference architecture. Tenderers shall clearly identify whether their offer is based on this equipment or an equivalent alternative and demonstrate compliance with every functional and performance requirement. No supplier illustration or indicative rating in this report shall be treated as final construction information.

2. Project Background and Existing Operating Condition

Britam Tower has eight passenger lifts serving the Mid-Rise and High-Rise sections. The operational concern is the interruption that occurs following loss of utility supply and during restoration of stable generator power. The supplied lift operating sequence indicates that lifts may stall during the transition, after which the generator starts and restores power and the lift controller/drive systems reboot and register floor position before returning to service. The source report records a typical recovery period of less than two minutes.

- Mid-Rise: four passenger lifts serving up to the 18th floor.
- High-Rise: four passenger lifts serving up to the 30th floor.
- Existing 6 kVA UPS units support communications and control equipment, including the lift port system, landing terminal and lift server; they do not provide full traction-power backup to the lift motors.
- Automatic Rescue Devices (ARDs) are reported as installed on parking-silo lifts A, B and C. The main eight passenger lifts do not have equivalent ARD coverage.

The solution is required to address the supply transition window and short-duration interruptions. It must maintain stable, compatible power to the lift systems without compromising lift safety, protection coordination or the existing standby-generation arrangement.

3. Problem Statement and Project Objectives

The current arrangement can permit lift stoppage during brief mains interruptions and the transfer between utility and standby generator sources. This creates passenger inconvenience, potential entrapment and rescue scenarios, disruption to building operations and reputational exposure.

The principal objectives are to:

- Maintain continuity of power to the lift systems during utility-to-generator transition and other brief power interruptions.
- Minimise lift stoppages and passenger entrapment events attributable to power interruptions.
- Provide a reliable, safe and maintainable solution compatible with the existing lifts, electrical distribution, generator and automatic transfer arrangements.
- Provide adequate inverter capacity, battery energy and transient response for the actual lift operating profile.
- Enable monitoring, alarm management and safe operation, with PV integration where included and technically justified.

4. Existing Lift Load and Design Basis

The KONE site survey dated 27 July 2026 provides the following connected-load baseline. Tenderers shall verify these figures during site inspection and shall not rely on connected load alone for final equipment sizing.

Lift section	Motor load	Drive + controller load	Total connected load
Mid-Rise	104.8 kW	9.6 kW	114.4 kW
High-Rise	180.3 kW	9.6 kW	189.9 kW
Total	**285.1 kW**	**19.2 kW**	**304.3 kW**

The source technical analysis dated 8 September 2026 identifies 300 kW / 600 kWh as the supplier baseline for six 50 kW / 100 kWh CHS2 units, but recommends evaluating an increase to 350 kW against the calculated 304.3 kW connected load. Accordingly, 300 kW / 600 kWh is an indicative reference baseline only. Each tenderer shall establish and justify the final inverter power rating, battery energy capacity and system configuration through a lift load and transient study.

- Assess lift starting current, acceleration demand, simultaneous operation assumptions and peak/transient loads.
- Assess regenerative energy from lift drives and confirm how it will be managed.
- State the usable battery energy after applying depth-of-discharge limits, conversion losses, temperature derating and other operating constraints.
- State the guaranteed autonomy under a clearly defined lift duty cycle and test scenario. The approximately two-hour figure stated in the source material for 600 kWh at 300 kW is indicative and is not a guaranteed duty-cycle requirement.
- Demonstrate adequate capacity margin and explain any proposed diversity or load-management assumptions.

5. Reference Technical Architecture and Functional Requirements

5.1 Reference architecture

The reference concept comprises a modular BESS/hybrid inverter arrangement connected to the building electrical supply and providing a dedicated backup output to the lift power distribution arrangement. The existing utility supply and standby generator remain the building's primary power sources, with the existing ATS/changeover arrangement coordinated with the BESS controls.

- Reference equipment: SAJ CHS2 or technically equivalent hybrid energy-storage system using LiFePO4 battery technology.
- Supplier reference baseline: six units, each nominally rated at 50 kW / 100 kWh, connected in parallel for 300 kW / 600 kWh total.
- Final capacity and number of units shall be determined by the tenderer's verified engineering design; the 350 kW evaluation recommendation shall be explicitly addressed.
- The system shall provide a dedicated backup output to the lift power distribution board(s), with all required switchgear, protection, isolation and control interfaces.
- The design shall coordinate with the utility, generator, ATS, existing building distribution and lift OEM requirements.

The diagrams below are reproduced from the source technical report as illustrative reference material only. Tenderers must submit project-specific drawings and shall not treat these diagrams as approved construction drawings.

Docusign Envelope ID: 9B8933C7-65BE-8872-823E-DC1DCF7B699D

8.2 Technical capacity review

Sizing recommendation from the 8 September 2026 technical analysis

The supplied BESS technical analysis compares the KONE/BRITAM calculated load of 304.3 kW against the SAJ 300 kW proposal and remarks that the proposed capacity shall be increased to 350 kW. This shall be incorporated as a condition of final design validation. The 300 kW / 600 kWh configuration shall therefore be treated as the supplier baseline, not the final approved design capacity.

8.3 Battery autonomy

The supplier baseline provides 600 kWh of nominal battery energy. The technical analysis describes this as offering approximately two hours of supply at 300 kW nominal load. This shall not be interpreted as a guaranteed two-hour full-load lift duty cycle until usable battery capacity, efficiency, depth of discharge, temperature, lift duty cycle and transient demand are validated. The final design shall specify a guaranteed minimum autonomy and transfer performance under an agreed test scenario.

9. Proposed Single Line Diagram

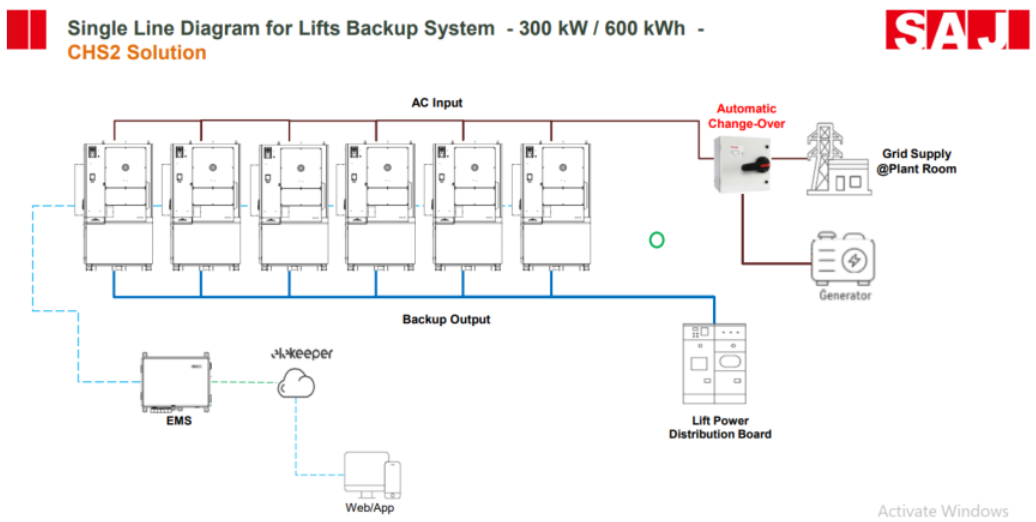

Supplier Single Line Diagram – 300 kW / 600 kWh CHS2 lift backup solution.

Figure 1: Supplier reference single-line concept for the CHS2 lift backup system (source report, page 7).

Docusign Envelope ID: 9B8933C7-65BE-8872-823E-DC1DCF7B699D

10. Detailed Electrical Integration and Engineering Requirements

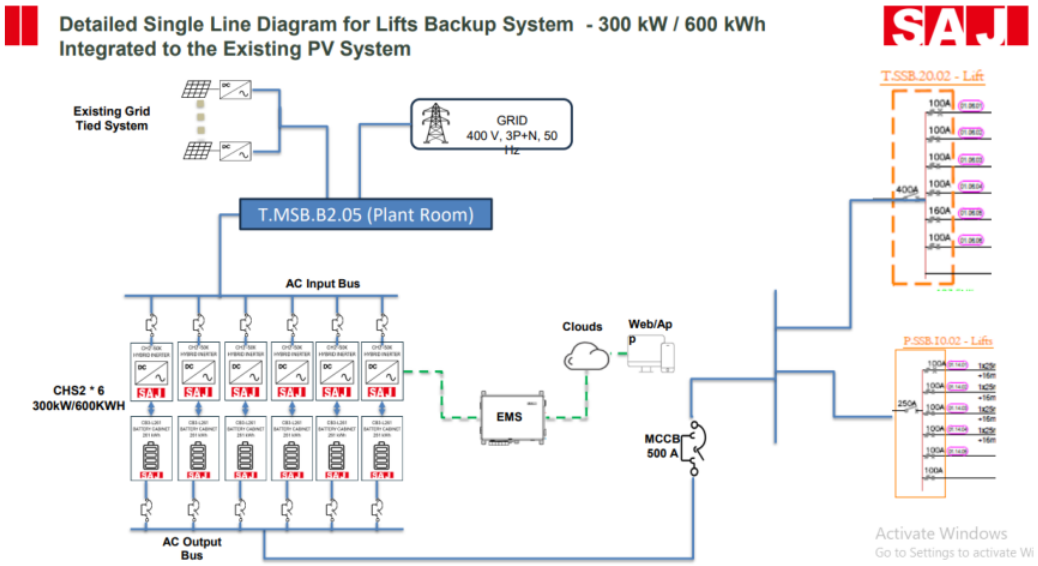

Supplier detailed SLD showing integration with the existing PV system, grid, EMS and lift distribution arrangement.

- Confirm exact point of connection to the existing electrical distribution system.
- Complete protection coordination and discrimination studies between CHS2, MCCBs, lift distribution boards, grid and generator.
- Confirm final ATS/change-over philosophy and actual transfer time.
- Validate lift starting current, transient demand and regenerative behaviour.
- Confirm cable sizes, voltage drop, short-circuit withstand and termination arrangements.
- Confirm earthing/bonding and surge protection.
- Confirm interface with the existing PV protection and control system.
- Define failure modes, bypass arrangements and safe isolation procedures.
- Confirm battery fire detection, isolation and emergency response arrangements.
- Confirm structural/foundation requirements and equipment access.

Figure 2: Illustrative integration concept with existing PV, grid, EMS and lift distribution (source report, page 8).

5.2 Operating philosophy

- The system shall maintain the required lift supply during loss of utility and the utility-to-generator transfer interval, without an unacceptable interruption to lift operation.

- The tenderer shall describe normal operation, utility failure, generator start and stabilisation, transfer to generator, return to utility, BESS charging and discharge, and recovery following a system fault.
- The tenderer shall define the role of the BESS and ATS/changeover equipment, including transfer sequence, interlocks, synchronisation requirements (if applicable), bypass and manual operating modes.
- The design shall prevent unintended parallel connection or back-feed and shall maintain safe isolation for maintenance and emergency response.
- The tenderer shall state the response/transfer time and guarantee the performance under the agreed operating conditions.

5.3 Electrical integration and engineering requirements

- Identify and justify the exact point(s) of connection to the existing electrical distribution system.
- Submit project-specific single-line diagrams showing utility, generator, ATS/changeover, BESS, protection devices, lift power distribution boards and relevant PV/EMS interfaces.
- Complete protection coordination and discrimination studies covering the BESS, MCCBs, lift distribution boards, grid and generator.
- Confirm ATS/changeover philosophy, transfer sequence, interlocking and actual transfer time.
- Validate lift starting current, transient demand, regenerative behaviour and load-sharing between parallel units.
- Provide cable sizing calculations, voltage-drop calculations, short-circuit withstand ratings, termination details and installation routes.
- Specify earthing, bonding, lightning and surge-protection arrangements.
- Define failure modes, bypass arrangements, emergency shutdown, safe isolation and restoration procedures.
- Detail battery fire detection, fire protection/suppression approach where applicable, ventilation, emergency isolation and emergency response provisions.
- Confirm compatibility with existing PV protection and controls where PV integration is proposed.
- Identify all required modifications to existing switchgear, distribution boards, controls, metering and building systems.

6. Physical Installation and Site Requirements

The supplier installation illustration in the source report shows an indicative six-unit arrangement approximately 10,000 mm long, with a shelter height of 2,500 mm, a 300 mm base/foundation, approximately 1,000 mm between units and 500 mm end clearances. These dimensions are indicative only and must be verified against the selected equipment datasheets, statutory requirements and actual site conditions.

Docusign Envelope ID: 9B8933C7-65BE-8872-823E-DC1DCF7B699D

11. Physical Installation and Site Requirements

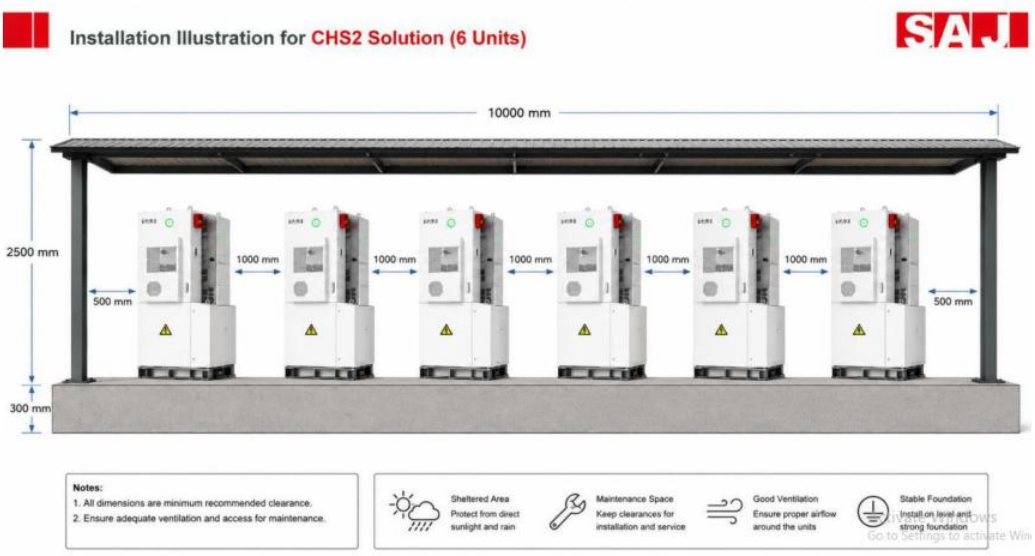

Illustrative supplier installation arrangement for six CHS2 units.

- Supplier illustration: approximately 10,000 mm overall arrangement, 2,500 mm shelter height, 300 mm base/foundation height, 1,000 mm inter-unit spacing and 500 mm end clearances.
- These dimensions are illustrative and shall be verified against the final equipment datasheet and site survey.
- Provide adequate ventilation and heat rejection.
- Provide weather protection and environmental suitability.
- Provide safe maintenance access and equipment clearances.
- Provide a stable, level foundation designed for the equipment load.
- Provide battery/electrical fire safety, detection, isolation and emergency response provisions.
- Provide restricted and secure access to the energy-storage installation.
- Provide drainage and protection against water ingress/flooding.
- Coordinate lightning and surge protection.
- Confirm delivery/replacement access route and future battery replacement logistics.

Britam Tower – Management Proposal | Proposed Lift Backup Power Solution

Figure 3: Illustrative six-unit equipment arrangement (source report, page 9).

- Undertake a site survey and confirm available footprint, equipment layout, clearances and access for operation and maintenance.

- Provide a stable, level foundation designed for the equipment weight, dynamic effects and site ground conditions; submit structural calculations and details.
- Provide adequate ventilation and heat rejection in accordance with manufacturer requirements.
- Provide weather protection and confirm environmental suitability of the proposed location and equipment enclosure.
- Provide safe maintenance access, equipment clearances, restricted access and appropriate security.
- Provide drainage and protection against water ingress and flooding.
- Provide battery/electrical fire safety, detection, isolation, emergency signage and response provisions.
- Coordinate lightning and surge protection.
- Confirm delivery, installation, lifting and future battery replacement access routes and logistics.
- Identify all civil, structural, electrical and builder's works included in the tender price.

7. Monitoring, Controls and Energy Management

- Provide local monitoring of BESS operating status, inverter output, battery state of charge, usable energy, alarms, temperatures and energy flows.
- Provide central monitoring and alarm notification, with clear alarm priorities, escalation routes and event/history logs.
- Describe any web, application or cloud monitoring platform, including licence/subscription costs, data hosting, data ownership and access rights.
- Specify cybersecurity controls, user roles, authentication, remote access controls, software/firmware updates and secure communications.
- Define local override, manual operation, safe shutdown and system behaviour during loss of communications.
- Where PV integration is included, explain the charging and dispatch control philosophy and demonstrate that lift backup functionality will not be compromised.

Docusign Envelope ID: 9B8933C7-65BE-8872-823E-DC1DCF7B699D

12. Monitoring and Energy Management

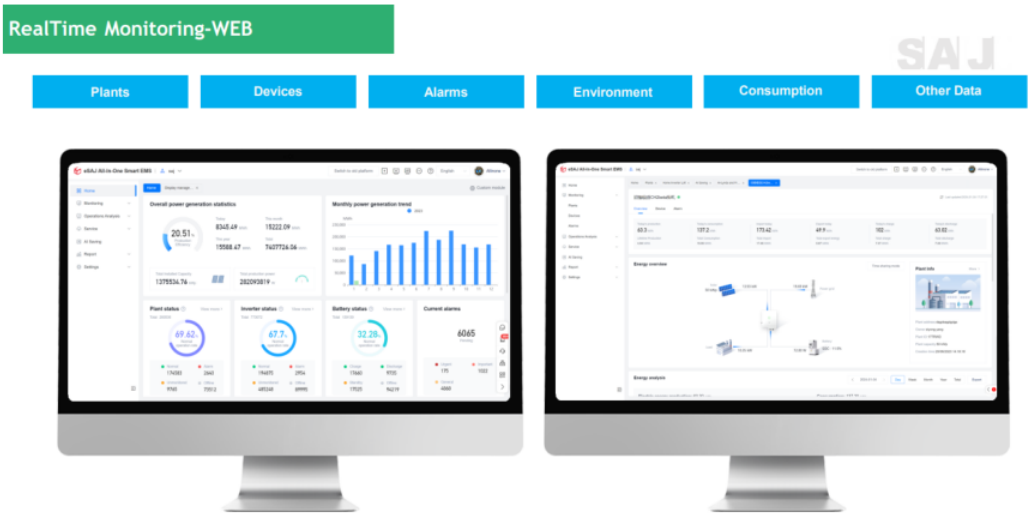

Illustrative SAJ EMS/web monitoring interface showing plant, device, alarm, environment and consumption data.

- Central monitoring of BESS operating status, alarms and energy flows.
- Potential integration with existing PV to capture/store excess PV generation.
- Web/app/cloud access shall be subject to cybersecurity, access-control and data-ownership requirements.
- Management shall require alarm escalation, local override, safe shutdown and loss-of-communications behaviour to be defined.

13. Proposed Phased Implementation Strategy

Management proposes that the project be implemented as a phased power-resilience programme rather than as a single all-or-nothing capital project. The working evaluation already records that the preferred solution captures the actual requirement and that a phased model has been requested because of the cost implication.

Phase 1 – Critical Lift Power Continuity

- Confirm final lift load/transient study and final system capacity.
- Implement the minimum equipment required to bridge the utility-to-generator transfer window for the critical lift load.
- Complete required lift distribution, protection, ATS/changeover and cabling works.
- Undertake full testing, commissioning and witnessed simulated grid-to-generator transfer tests.

Phase 2 – Resilience and Capacity Enhancement

- Increase/optimise BESS inverter capacity where validated by the load study; 350 kW shall be evaluated against the 304.3 kW connected-load baseline.
- Strengthen redundancy and critical distribution arrangements.
- Complete any additional protection, switchgear and control upgrades identified by Phase 1 performance.

Figure 4: Illustrative EMS/web monitoring interface (source report, page 10).

8. Implementation and Phasing

The source report describes a phased power-resilience programme. Tenderers shall provide a technically coherent phased proposal and clearly distinguish the scope, deliverables, dependencies, capacity and price for each phase.

Phase 1 – Critical Lift Power Continuity

- Confirm final lift load/transient study and system capacity.
- Implement the equipment and electrical works required to bridge the utility-to-generator transfer window for the agreed lift load.
- Complete lift distribution, protection, ATS/changeover and cabling works.
- Complete testing, commissioning and witnessed simulated grid-to-generator transfer tests.

Phase 2 – Resilience and Capacity Enhancement

- Increase or optimise BESS inverter capacity where justified by the verified load study; address the 350 kW evaluation recommendation.
- Strengthen redundancy and critical distribution arrangements.
- Complete additional protection, switchgear and control upgrades identified through Phase 1 performance and engineering validation.

Phase 3 – Energy Optimisation and PV Integration

- Integrate the BESS with the existing PV system where technically and commercially justified.
- Optimise charging from excess PV generation, subject to the approved control philosophy.
- Implement EMS-based energy monitoring and operational optimisation.
- Identify any additional energy-management functions separately from the essential lift-backup duty.

9. Risk and Safety Requirements

Key risk	Potential impact	Tenderer response / required control
Lift stoppage during power transition	Passenger entrapment, service disruption	Demonstrate seamless transition capability and witnessed transfer testing.
System undersizing	Failure to support actual lift transient demand	Provide verified load/transient study and justify inverter and battery sizing.
Incorrect electrical integration	Protection trips, equipment damage or unsafe operation	Submit protection, short-circuit, cable and earthing studies.
Battery/fire incident	Risk to occupants, equipment and building	Provide detection, isolation, ventilation, emergency procedures

		and applicable fire-safety provisions.
EMS/cloud cybersecurity	Unauthorised access or loss of monitoring	Provide cybersecurity, access-control and data-ownership measures.
Incomplete scope/cost escalation	Budget overrun and variation claims	Submit a complete BOQ, clear exclusions, interfaces and fixed/defined scope.
Future battery replacement	Lifecycle cost exposure and service disruption	Provide warranty, lifecycle, replacement and end-of-life assumptions.

10. Tenderer Submission Requirements

Tenderers shall submit, as a minimum, the following information. Any deviation, exclusion, assumption or qualification shall be listed in a separate schedule.

- Company profile, relevant experience and evidence of successful installations of comparable lift backup/BESS systems.
- Proposed equipment make, model, datasheets, certifications and confirmation of manufacturer support in Kenya.
- Design basis, site survey findings, load and transient study, inverter sizing, battery sizing, usable energy and guaranteed autonomy.
- Project-specific single-line diagrams, system architecture, control philosophy, ATS/changeover sequence and interface schedule.
- Protection coordination, cable sizing, earthing, surge protection and short-circuit calculations.
- Battery safety, fire protection, ventilation, environmental protection, foundation and installation layout details.
- Monitoring/EMS architecture, cybersecurity provisions, software licences and recurring charges.
- Detailed scope of works and itemised BOQ covering equipment, installation, civil works, cables, switchgear, fire safety, testing and commissioning.
- Implementation programme, phasing, lead times, shutdown requirements, method statements and risk assessments.
- Testing and commissioning plan, factory/site acceptance tests, simulated mains-failure tests and measurable acceptance criteria.
- Warranty terms for batteries, inverters, controls and installation; battery life and cycle assumptions; degradation guarantees; replacement costs.
- Operations and maintenance plan, preventive maintenance schedule, response times, spares availability, training and technical support.
- As-built drawings, O&M manuals, training materials, certificates and handover documentation.

- Commercial schedule identifying taxes, payment milestones, validity, exclusions, optional items, annual maintenance and lifecycle costs.

11. Installation, Testing, Commissioning and Acceptance

The tenderer shall include a complete implementation and acceptance methodology. The following activities shall be planned and priced as part of the relevant scope:

1. Detailed design and final lift load/transient study.
2. Independent technical review and approval of single-line diagrams, protection and integration design.
3. Final BOQ and scope confirmation, including interfaces and exclusions.
4. Review of factory documentation and equipment submittals before manufacture/delivery.
5. Site preparation, foundation, shelter and electrical works.
6. Installation of BESS/inverter units and associated distribution equipment.
7. Integration with utility, generator, ATS/changeover and lift distribution boards.
8. Integration with existing PV, where included in the approved scope.
9. Pre-commissioning inspections and electrical/protection tests.
10. Controlled simulated mains failure and grid-to-generator transfer test with the lift OEM/maintenance contractor present.
11. Performance testing under agreed lift operating conditions and demonstration of guaranteed autonomy/transfer performance.
12. Operator training, delivery of O&M manuals, as-built drawings and warranty documentation.
13. Formal handover and acceptance against agreed, measurable performance criteria.

12. Performance Guarantees and Post-Implementation Measures

Tenderers shall state guaranteed values, test methods and measurement points for the following:

- Maximum system response/transfer time under the specified operating scenarios.
- Successful grid-to-generator transition without lift interruption, subject to the agreed test protocol.
- Guaranteed inverter continuous and peak output, overload duration and parallel-unit performance.
- Guaranteed usable battery energy and minimum autonomy under the agreed duty cycle and environmental conditions.
- System availability, alarm reporting and fault-response arrangements.
- Battery state-of-charge, degradation assumptions and end-of-warranty capacity.
- Number of lift stoppages and passenger entrapment events attributable to power interruption after implementation.
- PV energy captured/stored, where PV integration is included.
- Maintenance call-outs, response times and restoration times.

13. Site Verification, Clarifications and Tender Qualifications

Tenderers shall inspect the site, verify existing electrical and lift interfaces, confirm installation constraints and raise all technical queries within the RFP clarification period. The connected-load figures and supplier diagrams in this report are reference information and must be validated. Any discrepancy between this report, the RFP, site conditions and manufacturer requirements shall be raised formally before tender close.

Tenderers shall not assume that existing switchgear, cables, ATS equipment, PV controls, foundations or fire-safety provisions are suitable for reuse without inspection and engineering verification. All assumptions and exclusions must be expressly identified and priced where applicable.

The final detailed design, equipment configuration, capacity, installation location and interfaces will be subject to review and written approval by Britam and its appointed consultants before procurement, installation or energisation.

14. Reference Information

The technical basis reproduced in this report is drawn from the Management Technical & Management Report – Proposed Lift Backup Power Solution, Britam Tower, dated October 2026, including:

- KONE Site Survey Report for UPS Backup of Britam Towers Lift Systems, dated 27 July 2026 (as referenced in the source report).
- Technical Analysis: BESS for Britam Tower Lifts, dated 8 September 2026 (as referenced in the source report).
- SAJ CHS2 supplier technical information, single-line diagrams, installation illustration and EMS monitoring illustrations reproduced in the source report.

The above reference information is provided to establish the tender design context. Tenderers remain responsible for verifying all data and producing a complete, safe and compliant design.